968 CIRCUIT

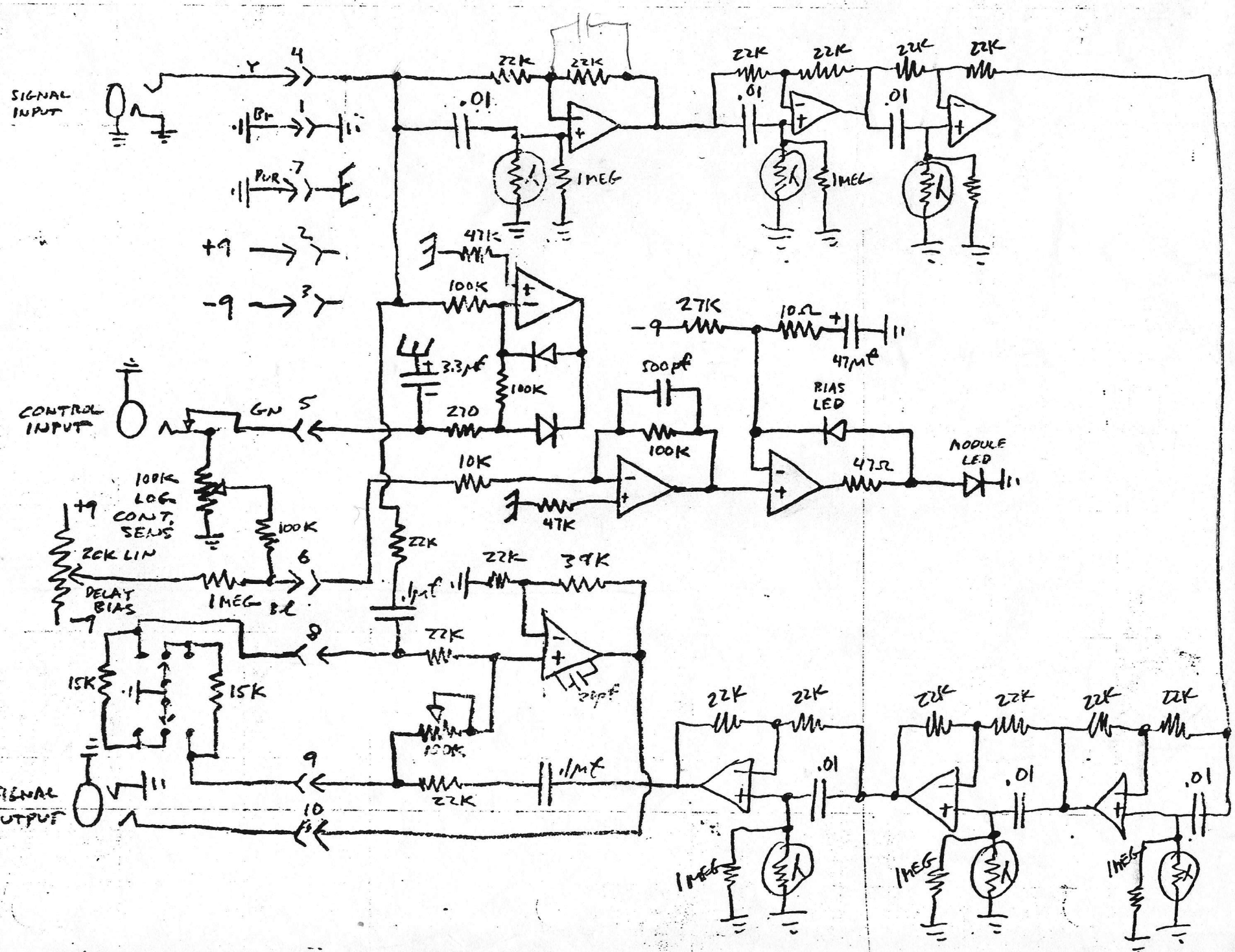

SIGNAL INPUT
Y
4
Br
1
PUR
7
+9
2
-9
3
22K
22K
.01
1MEG
22K
22K
22K
22K
.01
.01
1MEG
47K
100K
3.3µf
100K
270
27K
10Ω
47µf
-9
500pf
100K
BIAS LED
MODULE LED
47Ω
CONTROL INPUT
GN
5
10K
47K
100K LOG CONT. SENS
100K
+9
20K LIN
DELAY BIAS
-9
1MEG
Bl
6
22K
.1µf
22K
39K
22K
8
15K
15K
100K
9
22K
.1µf
10
SIGNAL OUTPUT
22K
22K
.01
1MEG
22K
22K
22K
22K
.01
1MEG
22K
22K
.01
1MEG